KS3040,1,2,5,8TAL
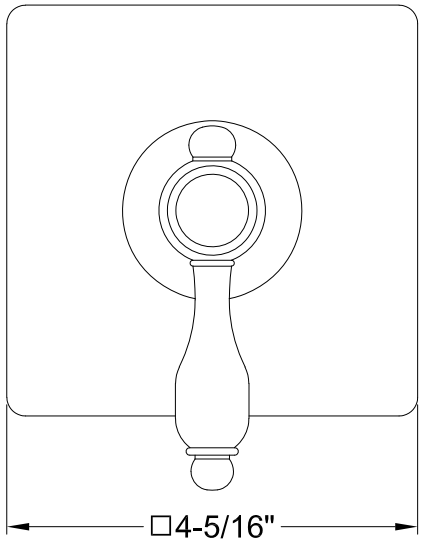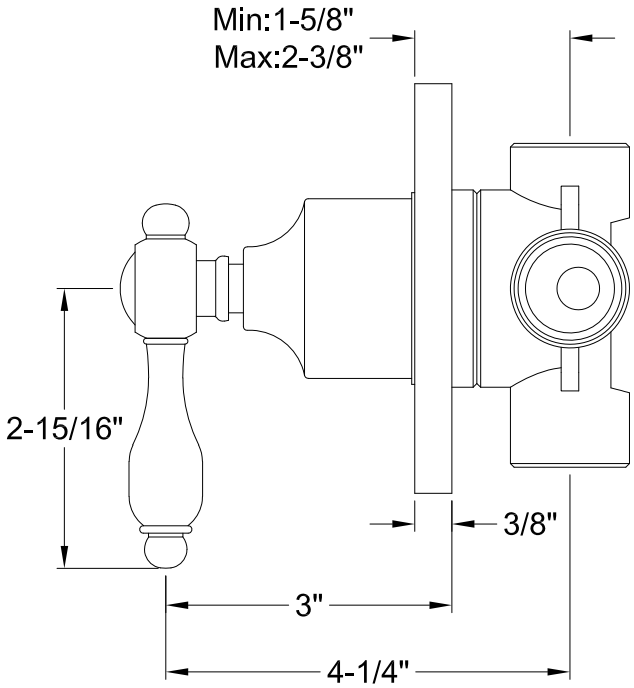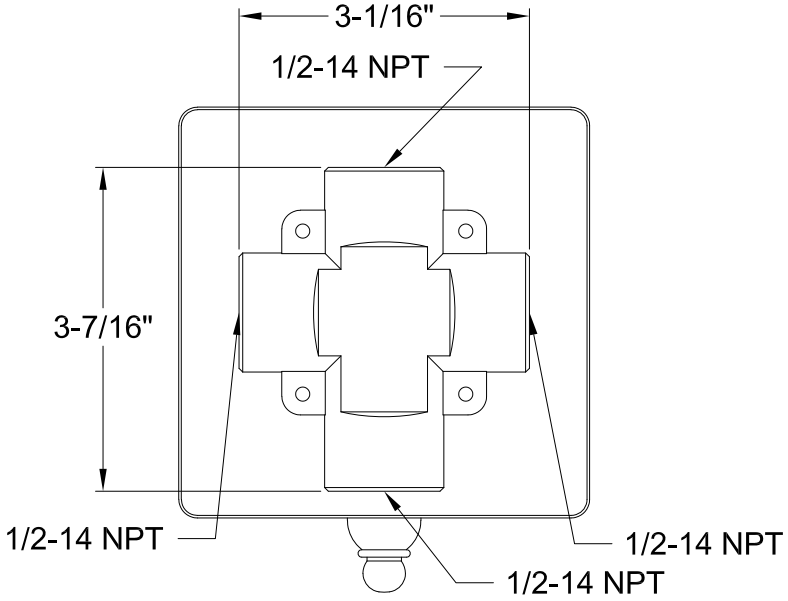
Three-Way Diverter Valve With Single Handle & Square Plate